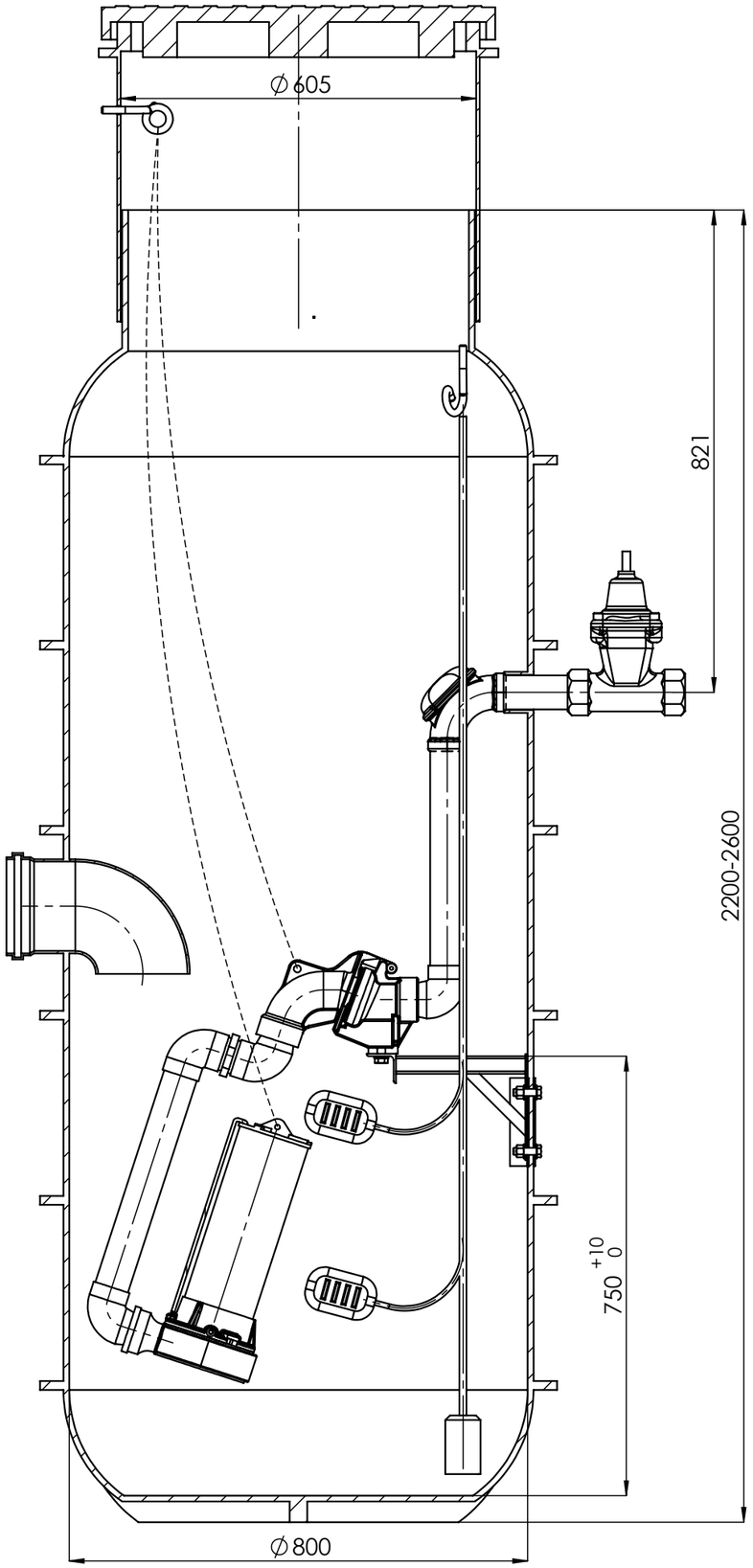
∅605
821
2200-2600
750 +10 0
∅800

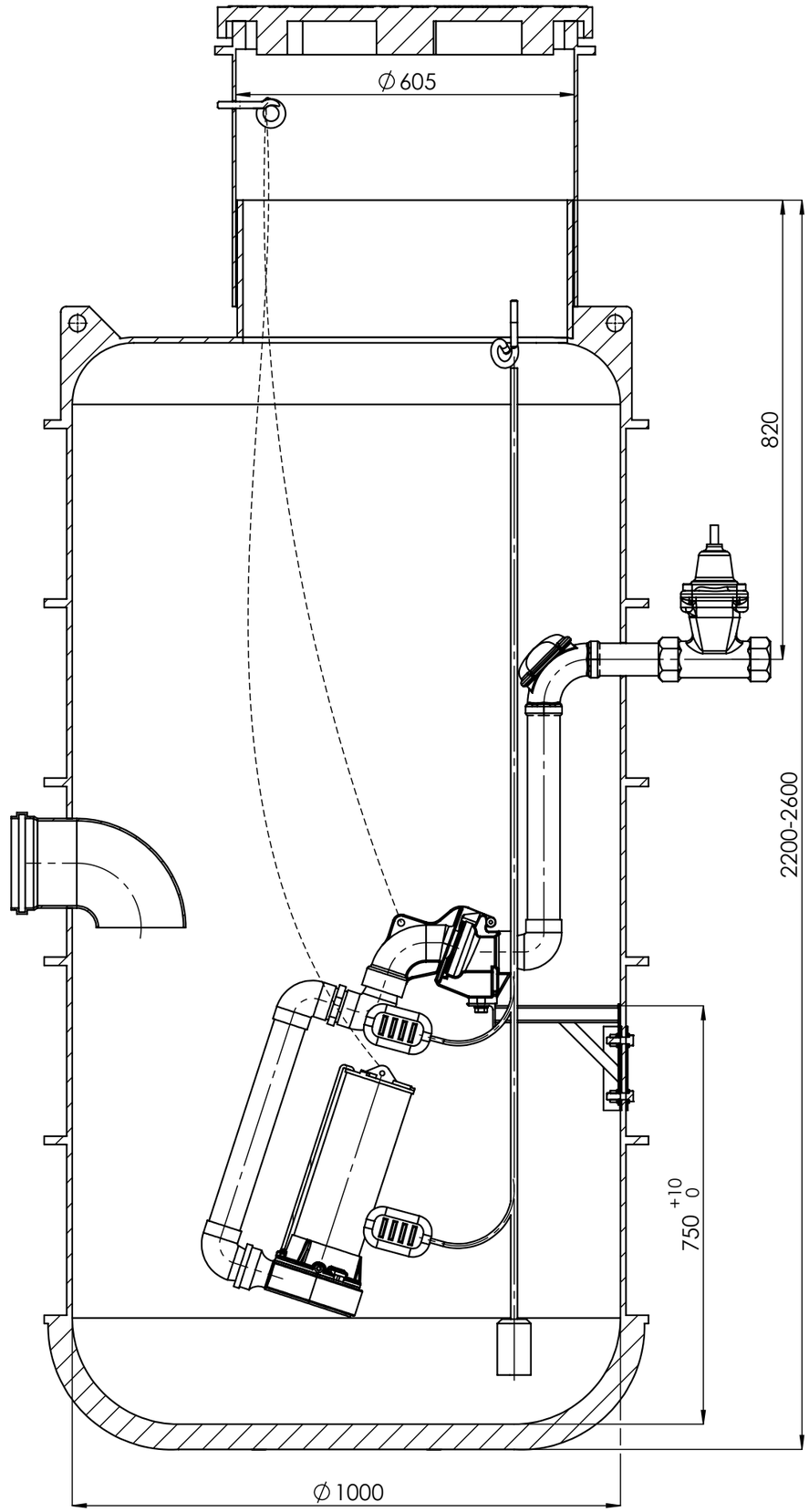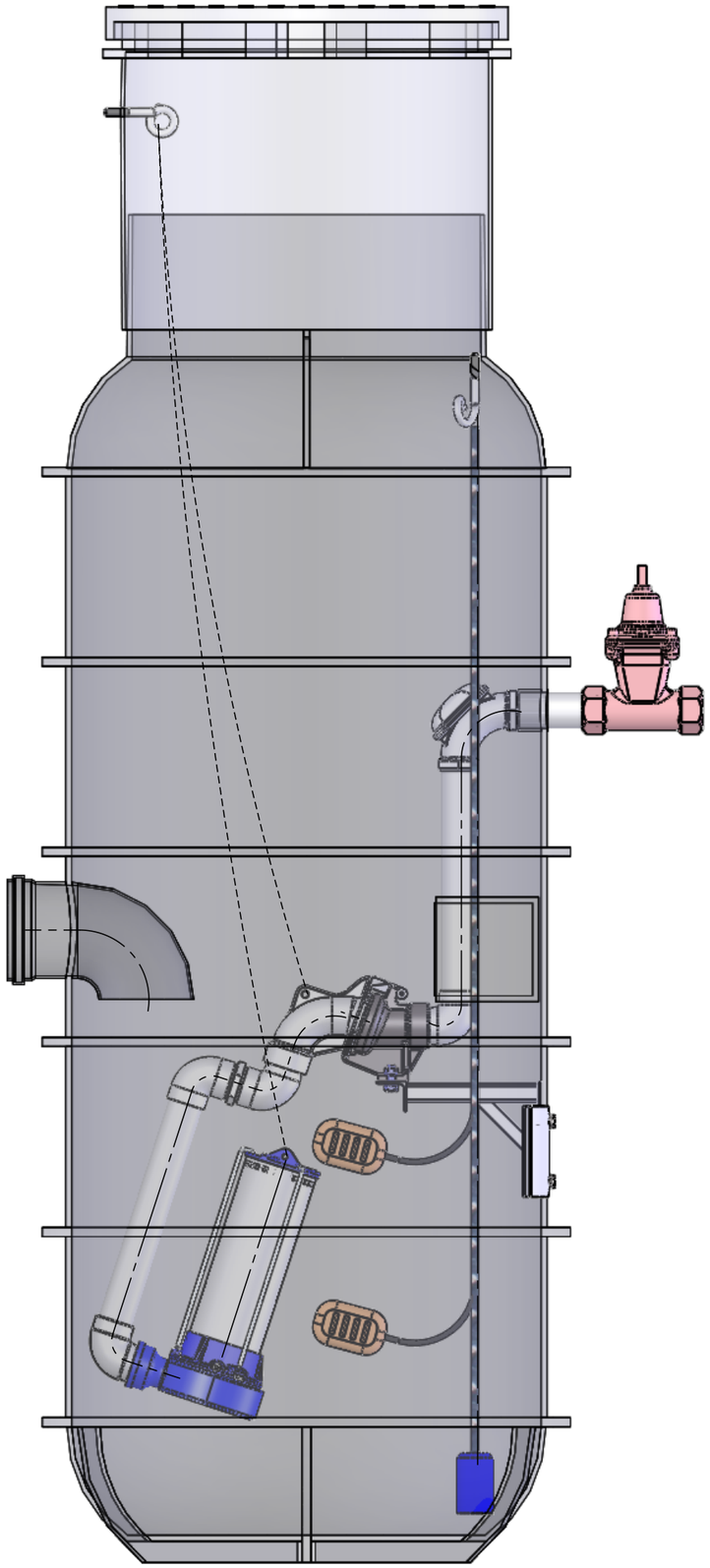
∅605
820
2200-2600
750 +10 0
∅1000